digital connections
Paradiso_IO_0s0.Sch

digital connections
Paradiso_IO_0s1.Sch

digital connections
Paradiso_IO_0s2.Sch

digital connections
Paradiso_IO_0s3.Sch

mixed signal connections
Paradiso_IO_1s0.sch

mixed signal connections
Paradiso_IO_1s1.sch

mixed signal connections
Paradiso_IO_1s2.sch

mixed signal connections
Paradiso_IO_1s3.sch

DUT supplies
Paradiso_VDD_VSS_s0.sch

DUT supplies
Paradiso_VDD_VSS_s1.sch

DUT supplies
Paradiso_VDD_VSS_s2.sch

DUT supplies
Paradiso_VDD_VSS_s3.sch

J750-system
UnE-J750-system-01.Sch

Buffers for relay control
Relay_control.Sch

History:

schematics	0v6 approved by Paul Cassidy & Paul Grogan 18 July 2006
pcb	0v9 approved by Paul Cassidy 04 August 2006
pcb	1v0 manufacturing start 07 August 2006
sch	1v0 release 07 August 2006
sch	1v0 revB release 22 August 2006: USB resistors values changed

FINAL schematics

for approved
" BW0612B_ParadisoHIB_1v0.pcb"

FR-Paradiso sheets overview

BW0612B-Paradiso-HIB

Title	*BW0612B-Paradiso-HIB*		
Description:	FR-Paradiso sheets overview		
Checked:	Date:	Version: 1v0	
Author: FS	Date: 22. Aug. 2006	Revision: B	
File: Paradiso_HIB.prj			Sheet 1 of 20

Smartest GmbH
Alte Landstrasse 25
D-85521 Ottobrunn
Germany

(these pads not bonded out
in the BGA 132 package)

FINAL schematics

for approved
" BW0612B_ParadisoHIB_1v0.pcb"

SITE 0

BW0612B-Paradiso-HIB

FR-Paradiso digital connections

Title	BW0612B-Paradiso-HIB		Smartest GmbH
Description:	FR-Paradiso digital connections		Alte Landstrasse 25 D-85521 Ottobrunn Germany
Checked:	Date:	Version: 1v0	
Author: FS	Date: 22. Aug. 2006	Revision: B	
File: Paradiso_IO_0x0.sch			Sheet 2 of 20

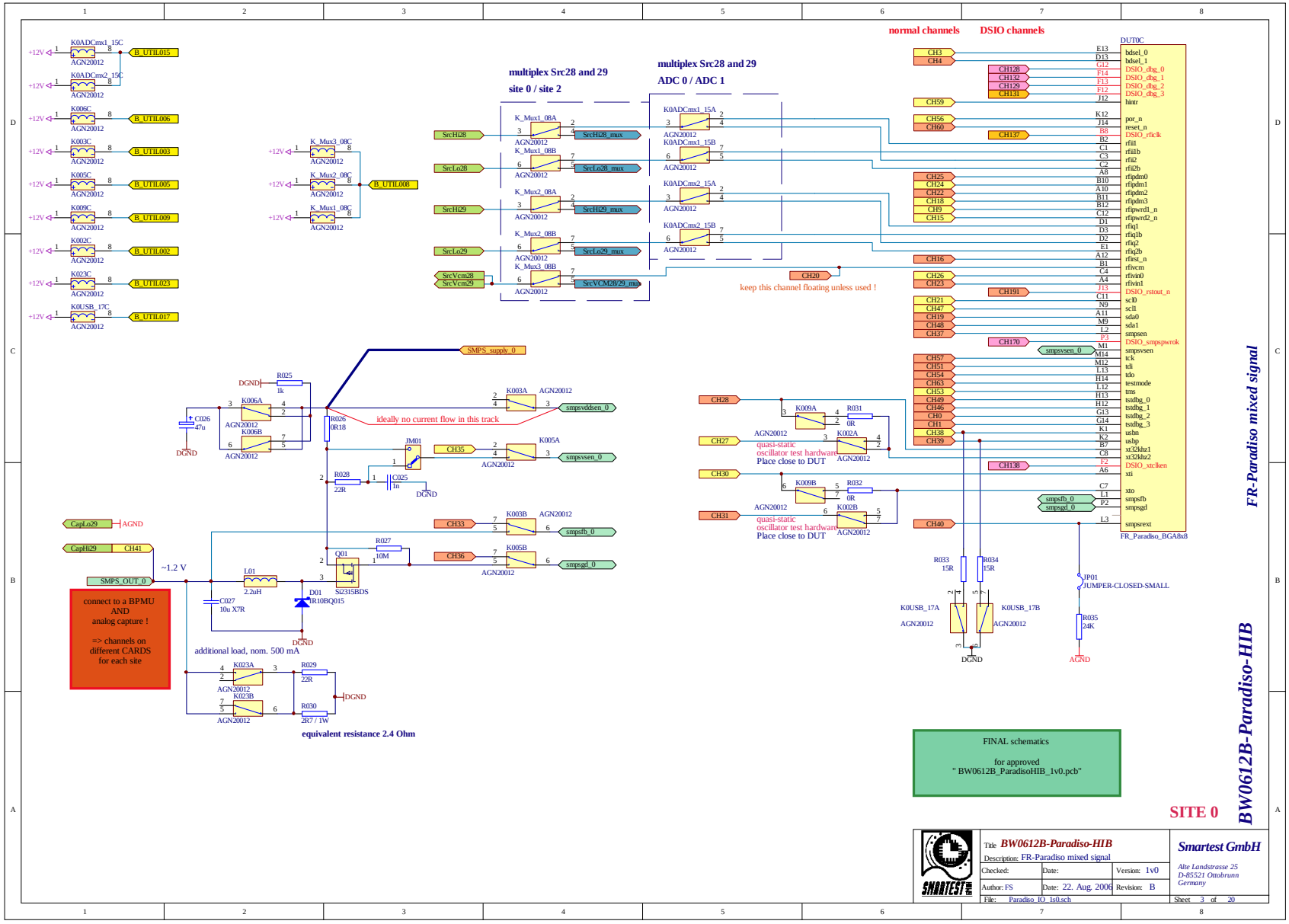
normal channels
DSIO channels
multiplex Src28 and 29
site 0 / site 2
multiplex Src28 and 29
ADC 0 / ADC 1
DUT0C
FR_Paradiso_BGA8x8
keep this channel floating unless used !
ideally no current flow in this track
SMPS_supply_0
connect to a BPMU
AND
analog capture !
=> channels on
different CARDS
for each site
~1.2 V
additional load, nom. 500 mA
equivalent resistance 2.4 Ohm
quasi-static
oscillator test hardware
Place close to DUT
FINAL schematics
for approved
" BW0612B_ParadisoHIB_1v0.pcb"
SITE 0
BW0612B-Paradiso-HIB
FR-Paradiso mixed signal
Title BW0612B-Paradiso-HIB
Description: FR-Paradiso mixed signal
Checked:
Date:
Version: 1v0
Author: FS
Date: 22. Aug. 2006
Revision: B
File: Paradiso_IO_1s0.sch
Sheet 3 of 20
Smartest GmbH
Alte Landstrasse 25
D-85521 Ottobrunn
Germany

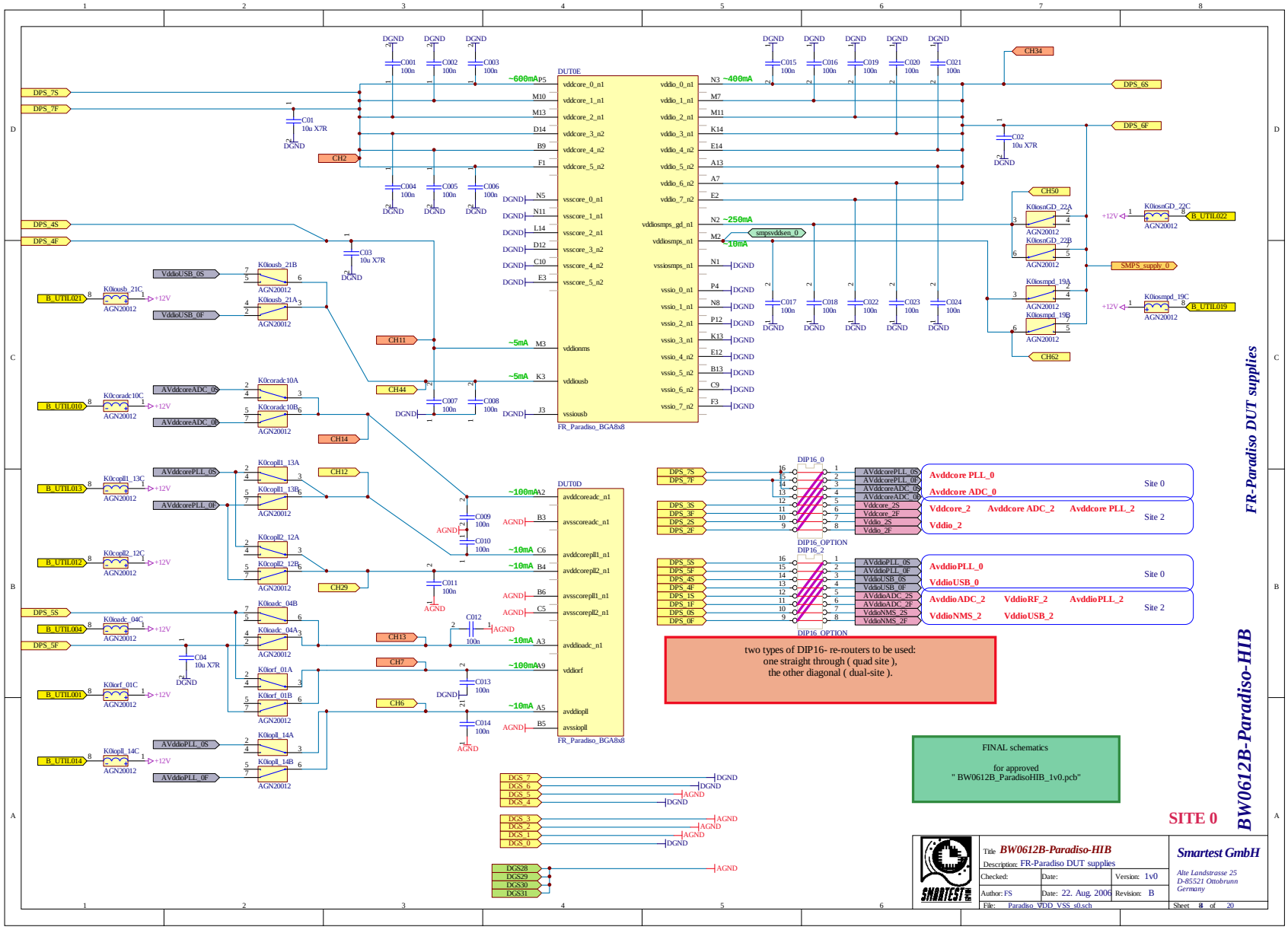
DUT0E
FR_Paradiso_BGA8x8
DUT0D
FR_Paradiso_BGA8x8
DIP16_0
DIP16_OPTION
DIP16_2
DIP16_OPTION
Avddcore PLL_0
Avddcore ADC_0
Site 0
Vddcore_2
Avddcore ADC_2
Avddcore PLL_2
Vddio_2
Site 2
AvddioPLL_0
VddioUSB_0
Site 0
AvddioADC_2
VddioRF_2
AvddioPLL_2
VddioNMS_2
VddioUSB_2
Site 2
two types of DIP16- re-routers to be used:
one straight through (quad site),
the other diagonal (dual-site).
FINAL schematics
for approved
" BW0612B_ParadisoHIB_1v0.pcb"
SITE 0
FR-Paradiso DUT supplies
BW0612B-Paradiso-HIB
Title BW0612B-Paradiso-HIB
Description: FR-Paradiso DUT supplies
Checked:
Date:
Version: 1v0
Author: FS
Date: 22. Aug. 2006
Revision: B
File: Paradiso_VDD_VSS_s0.sch
Smartest GmbH
Alte Landstrasse 25
D-85521 Ottobrunn
Germany
Sheet 8 of 20

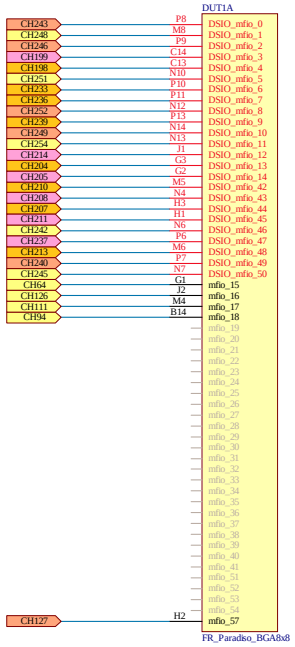

(these pads not bonded out
in the BGA 132 package)

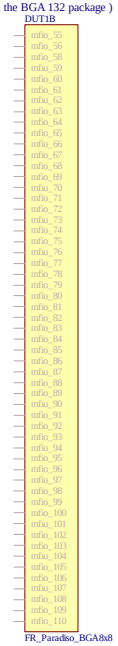

FR-Paradiso digital connections

BW0612B-Paradiso-HIB

FINAL schematics

for approved
" BW0612B_ParadisoHIB_1v0.pcb"

SITE 1

Title *BW0612B-Paradiso-HIB*			*Smartest GmbH*
Description: FR-Paradiso digital connections			*Alte Landstrasse 25* *D-85521 Ottobrunn* *Germany*
Checked:	Date:	Version: 1v0	
Author: FS	Date: 22. Aug. 2006	Revision: B	
File: Paradiso_ID_0s1.sch			Sheet 8 of 20

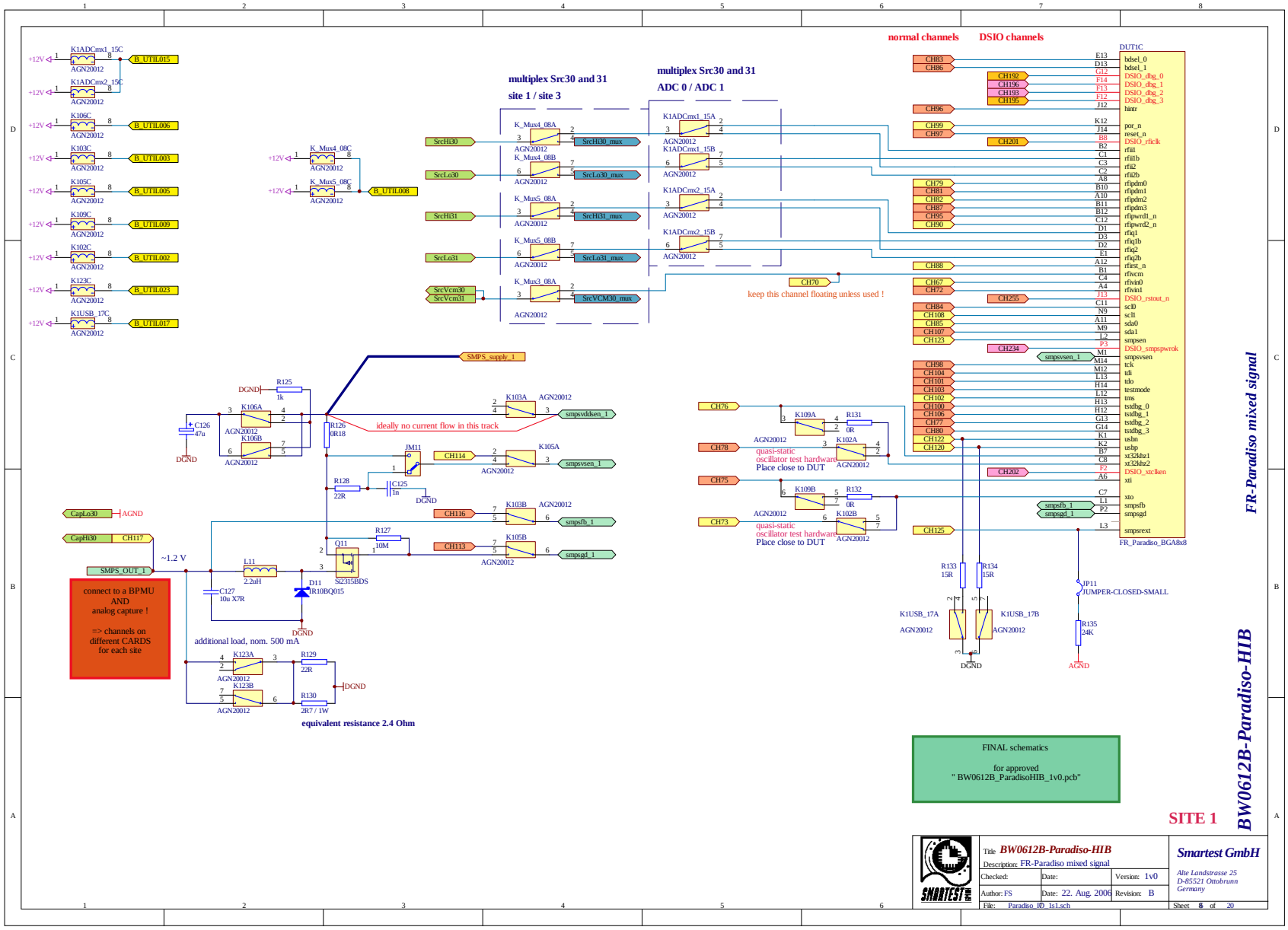
normal channels
DSIO channels
multiplex Src30 and 31
site 1 / site 3
multiplex Src30 and 31
ADC 0 / ADC 1
DUT1C
FR_Paradiso_BGA8x8
keep this channel floating unless used !
ideally no current flow in this track
SMPS_supply_1
SMPS_OUT_1
~1.2 V
connect to a BPMU
AND
analog capture !
=> channels on
different CARDS
for each site
additional load, nom. 500 mA
equivalent resistance 2.4 Ohm
quasi-static
oscillator test hardware
Place close to DUT
FINAL schematics
for approved
" BW0612B_ParadisoHIB_1v0.pcb"
SITE 1
FR-Paradiso mixed signal
BW0612B-Paradiso-HIB
Title BW0612B-Paradiso-HIB
Description: FR-Paradiso mixed signal
Checked:
Date:
Version: 1v0
Author: FS
Date: 22. Aug. 2006
Revision: B
File: Paradiso_IO_1s1.sch
Sheet 8 of 20
Smartest GmbH
Alte Landstrasse 25
D-85521 Ottobrunn
Germany

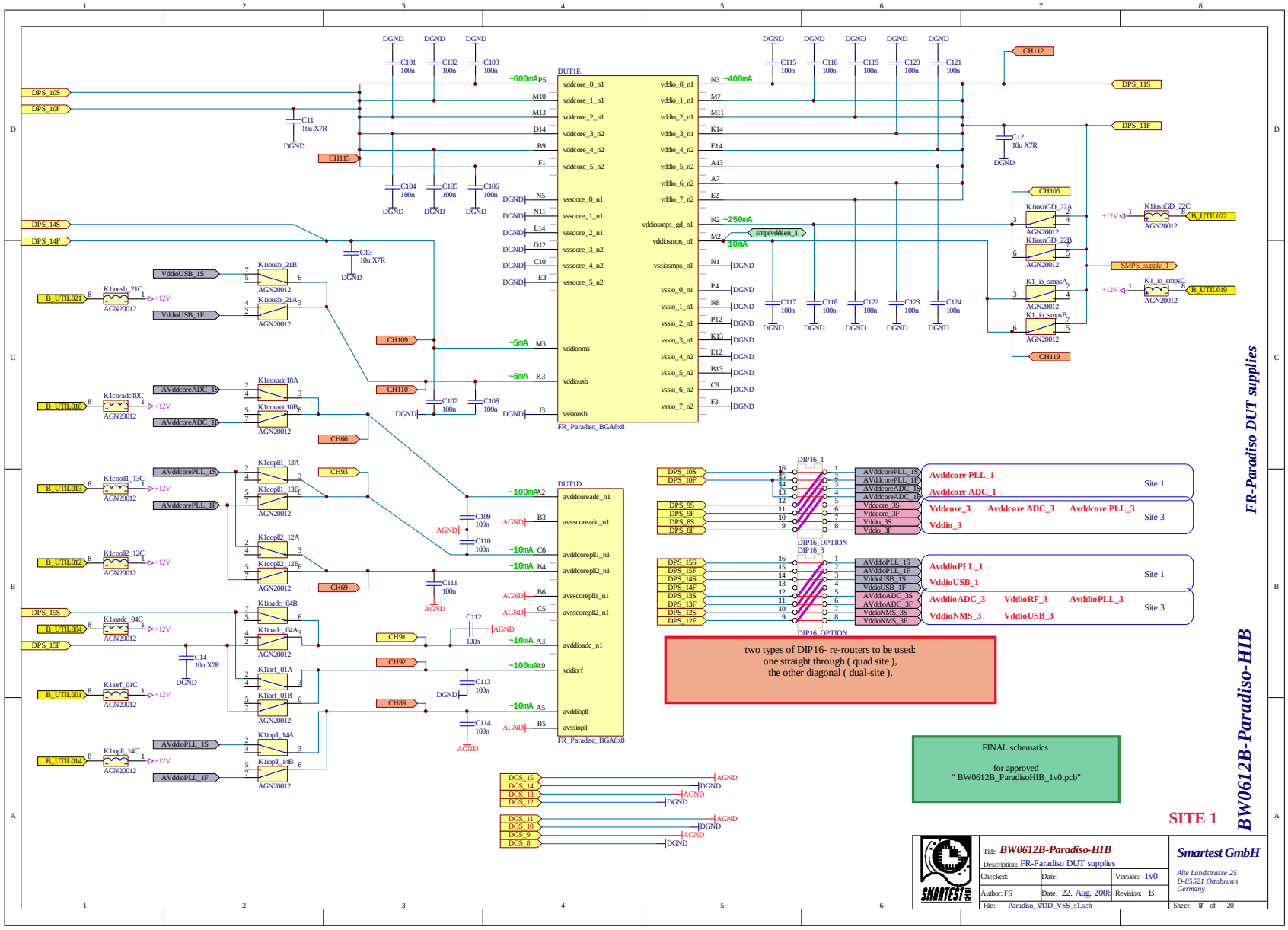
DUT1E
FR_Paradiso_BGA8x8
DUT1D
FR_Paradiso_BGA8x8
DIP16_1
DIP16_OPTION
DIP16_3
DIP16_OPTION
Avddcore PLL_1
Avddcore ADC_1
Site 1
Vddcore_3
Avddcore ADC_3
Avddcore PLL_3
Vddio_3
Site 3
AvddioPLL_1
VddioUSB_1
Site 1
AvddioADC_3
VddioRF_3
AvddioPLL_3
VddioNMS_3
VddioUSB_3
Site 3
two types of DIP16- re-routers to be used:
one straight through (quad site),
the other diagonal (dual-site).
FINAL schematics
for approved
" BW0612B_ParadisoHIB_1v0.pcb"
SITE 1
FR-Paradiso DUT supplies
BW0612B-Paradiso-HIB
Title BW0612B-Paradiso-HIB
Description: FR-Paradiso DUT supplies
Checked:
Date:
Version: 1v0
Author: FS
Date: 22. Aug. 2006
Revision: B
File: Paradiso_VDD_VSS_s1.sch
Sheet 8 of 20
Smartest GmbH
Alte Landstrasse 25
D-85521 Ottobrunn
Germany

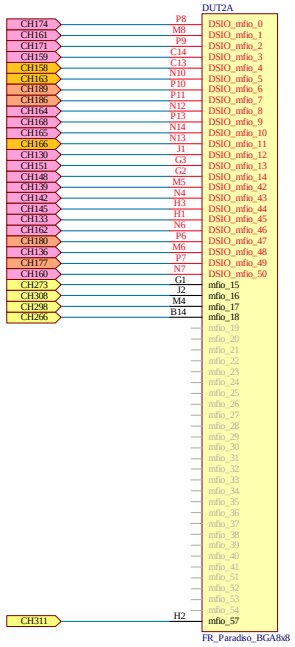

(these pads not bonded out
in the BGA 132 package)

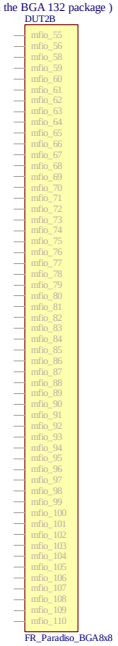

FINAL schematics

for approved
" BW0612B_ParadisoHIB_1v0.pcb"

SITE 2

FR-Paradiso digital connections

BW0612B-Paradiso-HIB

Title	***BW0612B-Paradiso-HIB***		***Smartest GmbH***
Description:	FR-Paradiso digital connections		*Alte Landstrasse 25* *D-85521 Ottobrunn* *Germany*
Checked:	Date:	Version: 1v0	
Author: FS	Date: 22. Aug. 2006	Revision: B	
File: Paradiso_ID_0x2.sch			Sheet 8 of 20

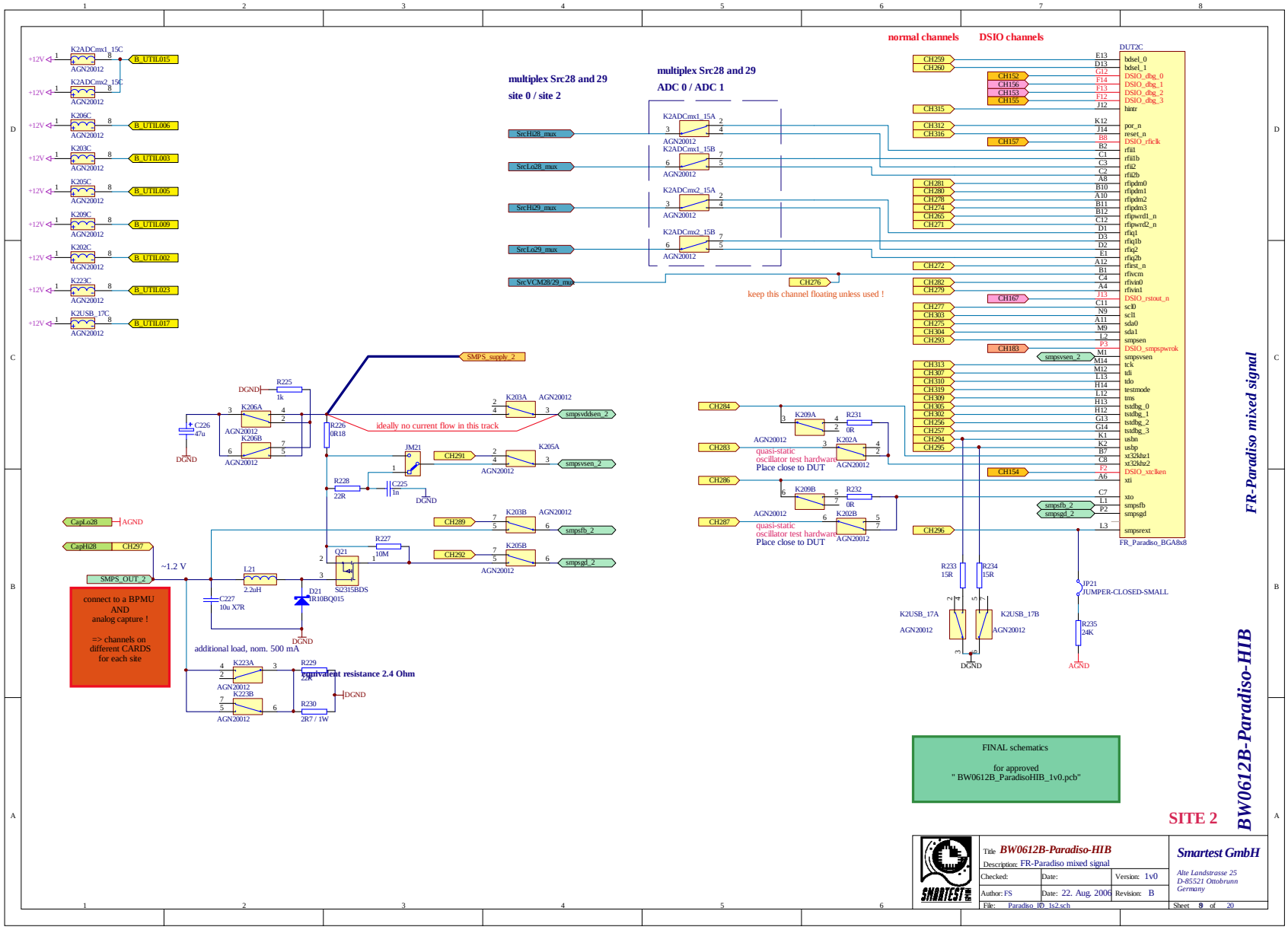
normal channels
DSIO channels
multiplex Src28 and 29
site 0 / site 2
multiplex Src28 and 29
ADC 0 / ADC 1
DUT2C
FR_Paradiso_BGA8x8
keep this channel floating unless used !
ideally no current flow in this track
SMPS_supply_2
quasi-static
oscillator test hardware
Place close to DUT
connect to a BPMU
AND
analog capture !
=> channels on
different CARDS
for each site
~1.2 V
additional load, nom. 500 mA
equivalent resistance 2.4 Ohm
FINAL schematics
for approved
" BW0612B_ParadisoHIB_1v0.pcb"
SITE 2
FR-Paradiso mixed signal
BW0612B-Paradiso-HIB
Title BW0612B-Paradiso-HIB
Description: FR-Paradiso mixed signal
Checked:
Date:
Version: 1v0
Author: FS
Date: 22. Aug. 2006
Revision: B
File: Paradiso_IO_1s2.sch
Sheet 9 of 20
Smartest GmbH
Alte Landstrasse 25
D-85521 Ottobrunn
Germany

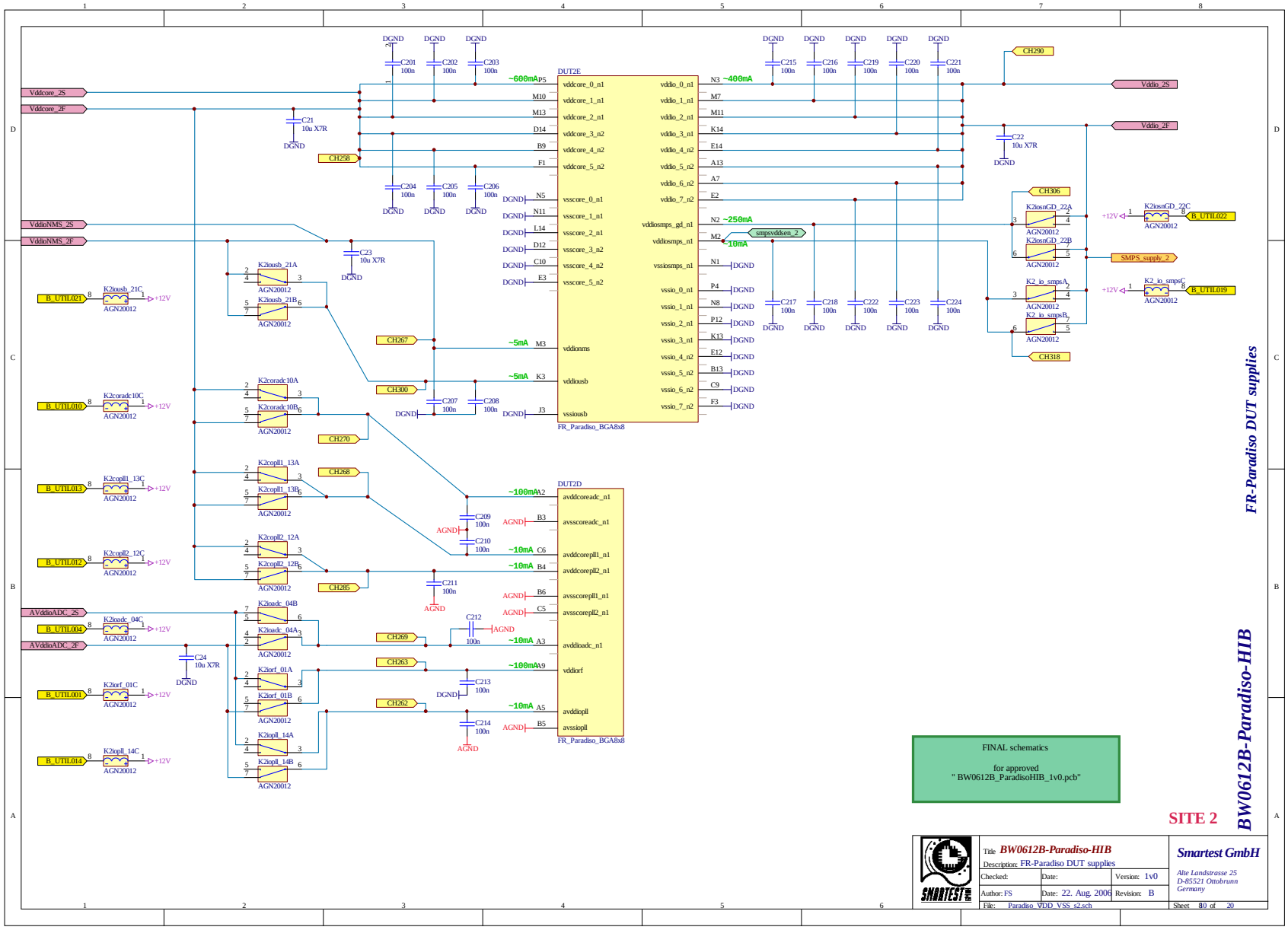

FINAL schematics

for approved
" BW0612B_ParadisoHIB_1v0.pcb"

SITE 2

FR-Paradiso DUT supplies

BW0612B-Paradiso-HIB

Title: BW0612B-Paradiso-HIB			Smartest GmbH
Description: FR-Paradiso DUT supplies			Alte Landstrasse 25 D-85521 Ottobrunn Germany
Checked:	Date:	Version: 1v0	
Author: FS	Date: 22. Aug. 2006	Revision: B	
File: Paradiso_VDD_VSS_s2.sch			Sheet 10 of 20

FINAL schematics

for approved
" BW0612B_ParadisoHIB_1v0.pcb"

SITE 3

BW0612B-Paradiso-HIB

FR-Paradiso digital connections

Title	BW0612B-Paradiso-HIB		Smartest GmbH
Description:	FR-Paradiso digital connections		Alte Landstrasse 25 D-85521 Ottobrunn Germany
Checked:	Date:	Version: 1v0	
Author: FS	Date: 22. Aug. 2006	Revision: B	
File: Paradiso_ID_0x3.sch			Sheet 11 of 20

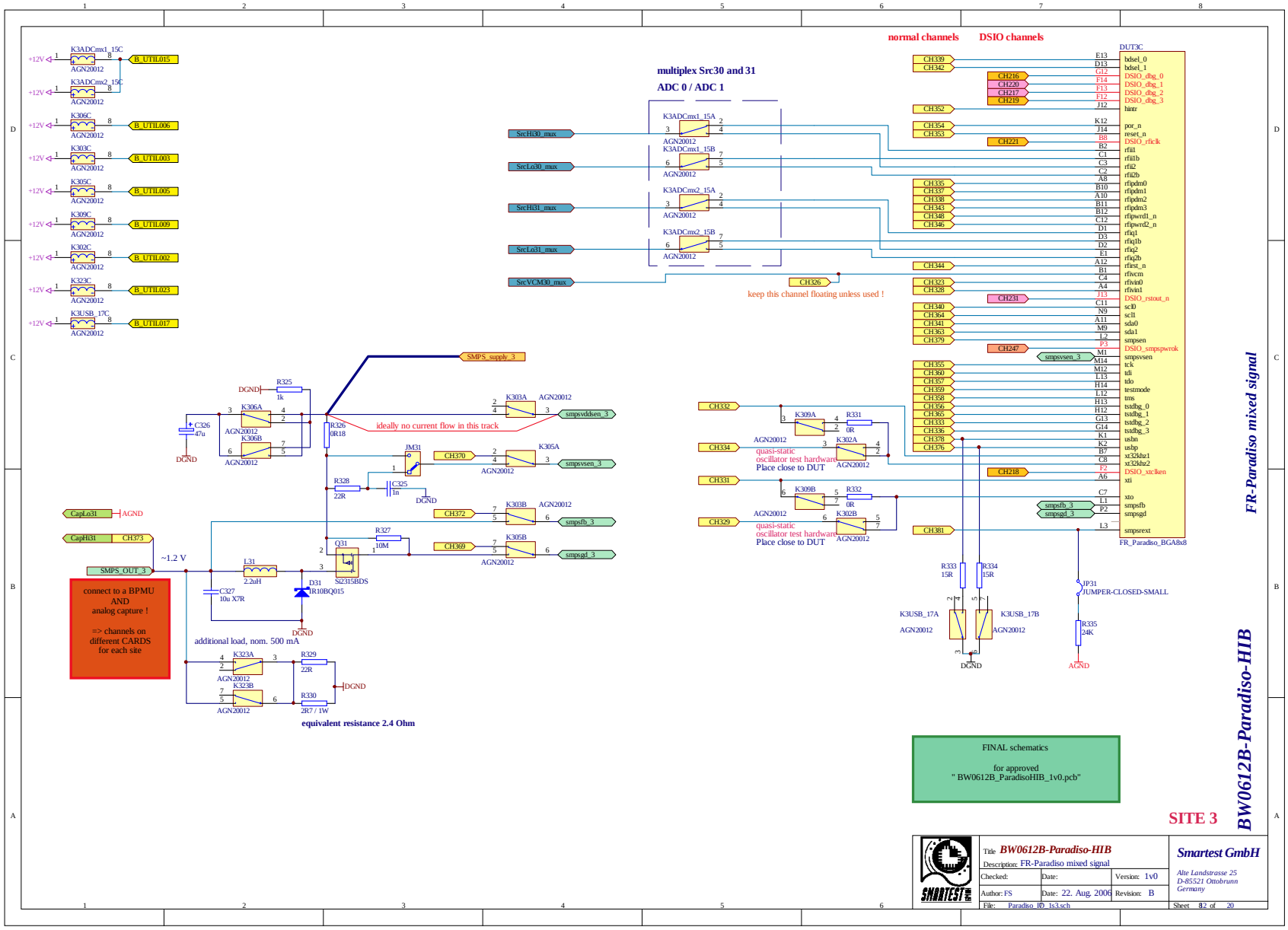
normal channels
DSIO channels
multiplex Src30 and 31
ADC 0 / ADC 1
keep this channel floating unless used !
ideally no current flow in this track
SMPS_supply_3
connect to a BPMU
AND
analog capture !
=> channels on
different CARDS
for each site
~1.2 V
additional load, nom. 500 mA
equivalent resistance 2.4 Ohm
quasi-static
oscillator test hardware
Place close to DUT
FR_Paradiso_BGA8x8
FINAL schematics
for approved
" BW0612B_ParadisoHIB_1v0.pcb"
SITE 3
BW0612B-Paradiso-HIB
FR-Paradiso mixed signal
Smartest GmbH
Alte Landstrasse 25
D-85521 Ottobrunn
Germany
Title BW0612B-Paradiso-HIB
Description: FR-Paradiso mixed signal
Checked:
Date:
Version: 1v0
Author: FS
Date: 22. Aug. 2006
Revision: B
File: Paradiso_IO_1s3.sch
Sheet 12 of 20

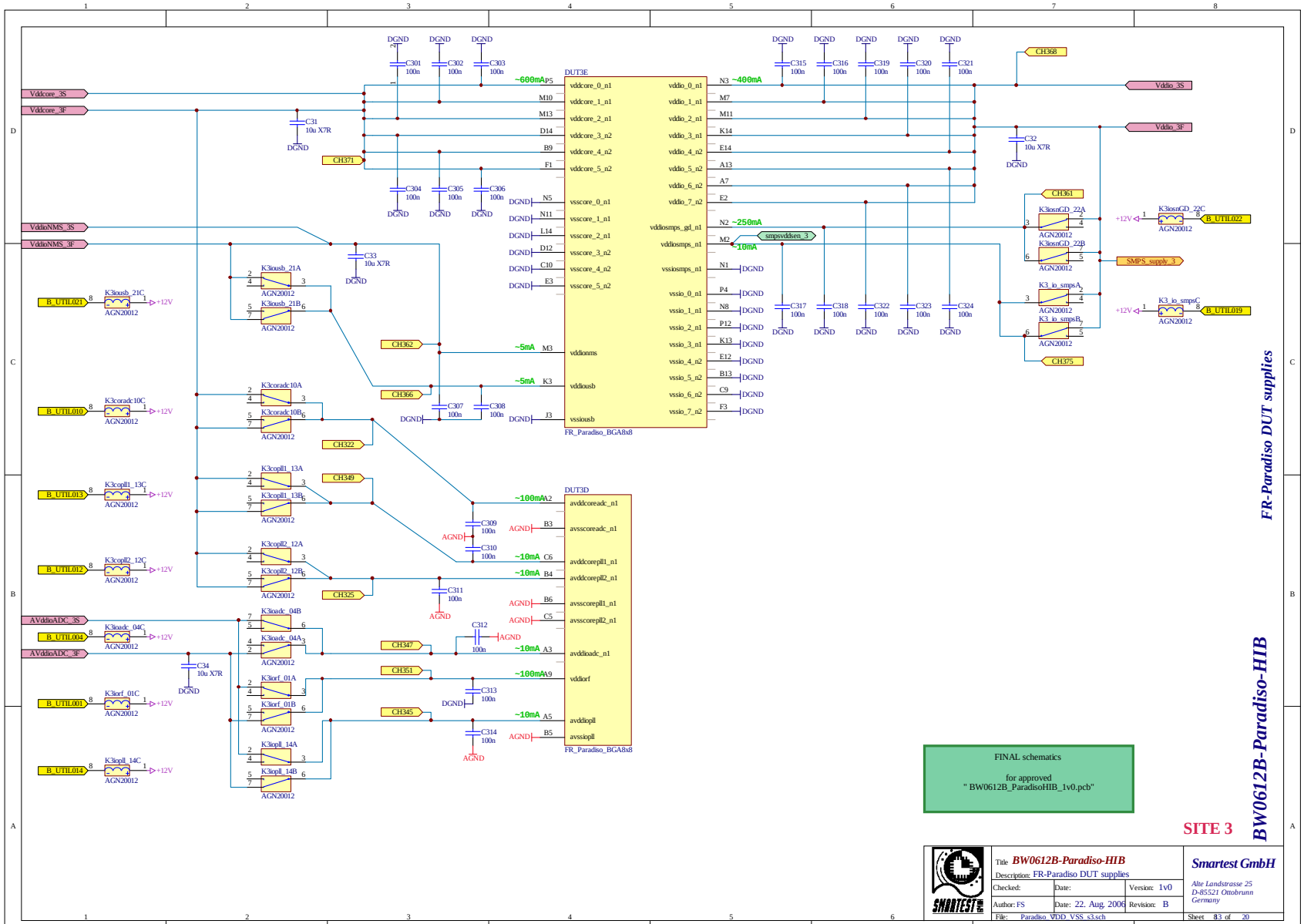
DUT3E
FR_Paradiso_BGA8x8
DUT3D
FR_Paradiso_BGA8x8
Vddcore_3S
Vddcore_3F
VddioNMS_3S
VddioNMS_3F
AVddioADC_3S
AVddioADC_3F
Vddio_3S
Vddio_3F
SMPS_supply_3
smpsvddsen_3
~600mA
~400mA
~250mA
~10mA
~5mA
~100mA
B_UTIL021
B_UTIL010
B_UTIL013
B_UTIL012
B_UTIL004
B_UTIL001
B_UTIL014
B_UTIL022
B_UTIL019
CH368
CH371
CH361
CH375
CH362
CH366
CH322
CH349
CH325
CH347
CH351
CH345
FINAL schematics
for approved
" BW0612B_ParadisoHIB_1v0.pcb"
SITE 3
BW0612B-Paradiso-HIB
FR-Paradiso DUT supplies
Title BW0612B-Paradiso-HIB
Description: FR-Paradiso DUT supplies
Checked:
Date:
Version: 1v0
Author: FS
Date: 22. Aug. 2006
Revision: B
File: Paradiso_VDD_VSS_s3.sch
Smartest GmbH
Alte Landstrasse 25
D-85521 Ottobrunn
Germany
Sheet 13 of 20

Digital Channel Connectors 0..255

digital1.sch

Digital Channel Connectors 256..447 (not available)

digital2R.sch

Device Power Supplies 0..15

dps.sch

MSO
MixedSignalSlot7.sch

CUB and CTO Connectors

cubcto.sch

FINAL schematics

for approved
" BW0612B_ParadisoHIB_1v0.pcb"

sys SHEET OVERVIEW

BW0612B-Paradiso-HIB

Title *BW0612B-Paradiso-HIB*			*Smartest GmbH*
Description: sys SHEET OVERVIEW			*Alte Landstrasse 25*
Checked:	Date:	Version: 1v0	*D-85521 Ottobrunn*
Author: FS	Date: 22. Aug. 2006	Revision: B	*Germany*
File: UnE-J750-System-01.sch			Sheet 14 of 20

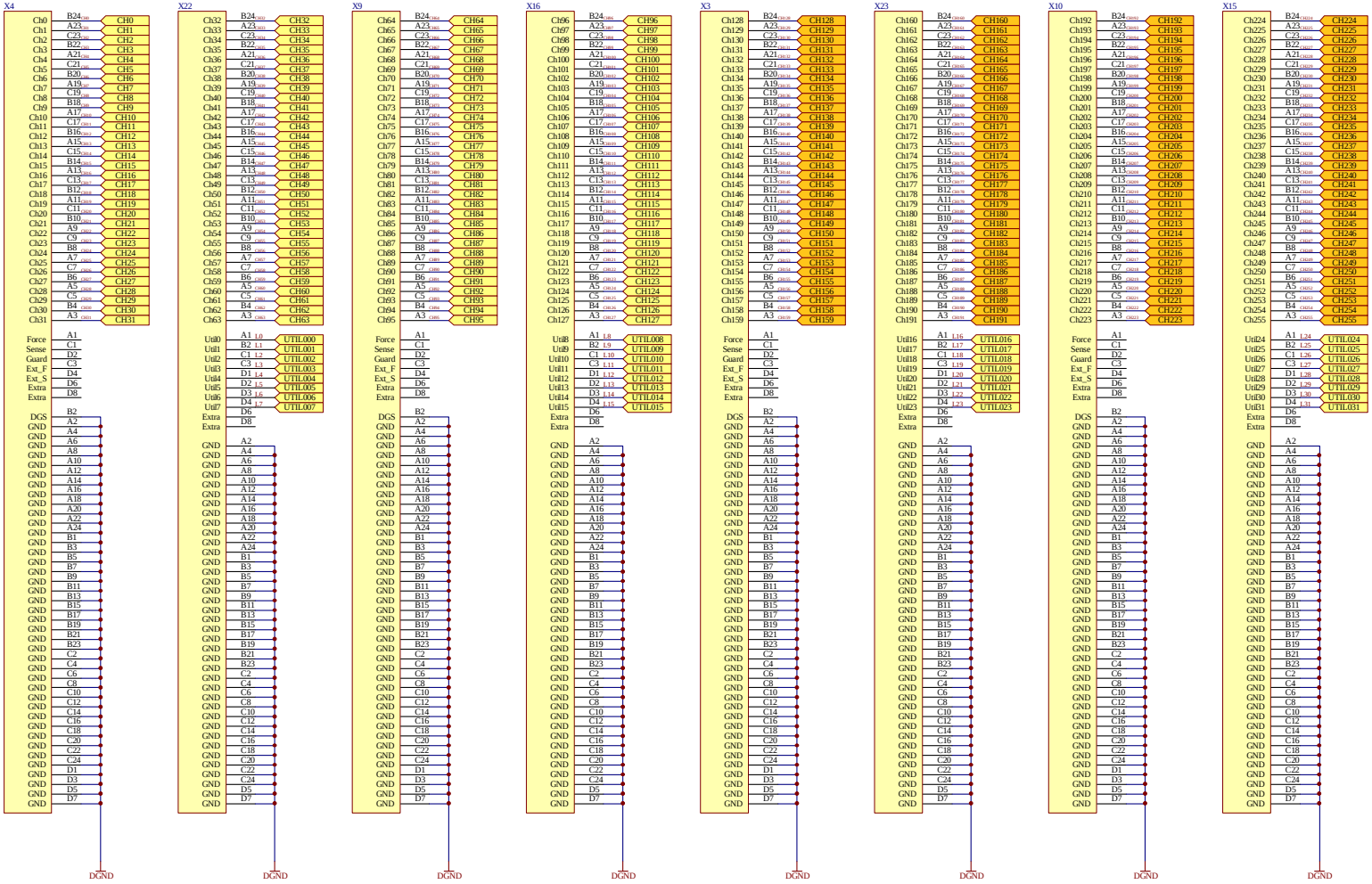

"UNISEM Europe" - configuration

CHxxx these channels have dsio-capacity (digital capture)

FINAL schematics

for approved

" BW0612B_ParadisoHIB_1v0.pcb"

Title: BW0612B-Paradiso-HIB			Smartest GmbH
Description: Digital Chans 0-255			Alte Landstrasse 25 D-85521 Ottobrunn Germany
Checked:	Date:	Version: 1v0	
Author: FS	Date: 22. Aug. 2006	Revision: B	
File: digital1.sch7			Sheet 15 of 20

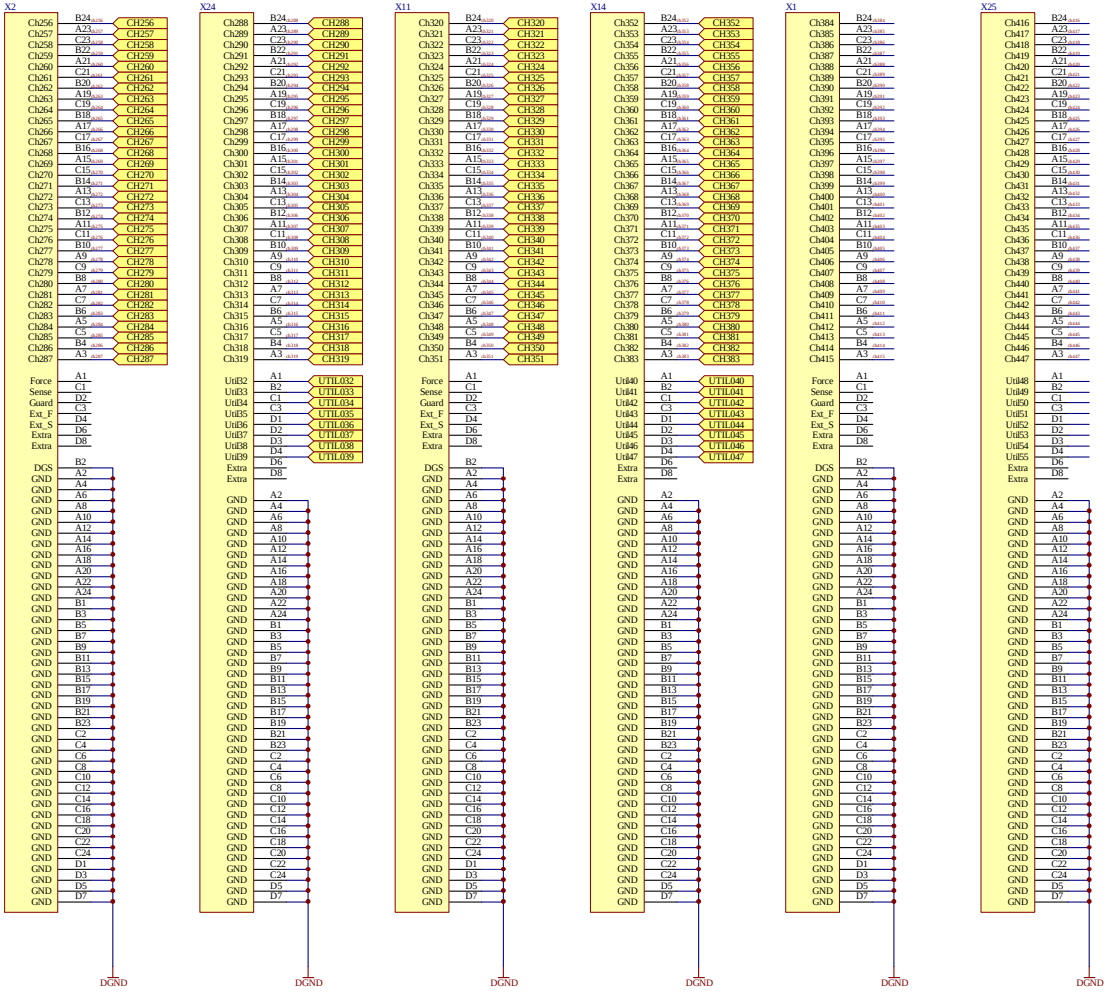

these channels
not available !

Slot 4 & 5 must be stuffed with channel cards !

"UNISEM Europe" - configuration

FINAL schematics

for approved
" BW0612B_ParadisoHIB_1v0.pcb"

Digital Chans 256-383

BW0612B-Paradiso-HIB

Title: BW0612B-Paradiso-HIB			Smartest GmbH
Description: Digital Chans 256-383			Alte Landstrasse 25 D-85521 Ottobrunn Germany
Checked:	Date:	Version: 1v0	
Author: FS	Date: 22. Aug. 2006	Revision: B	
File: digital2R.sch			Sheet 16 of 20

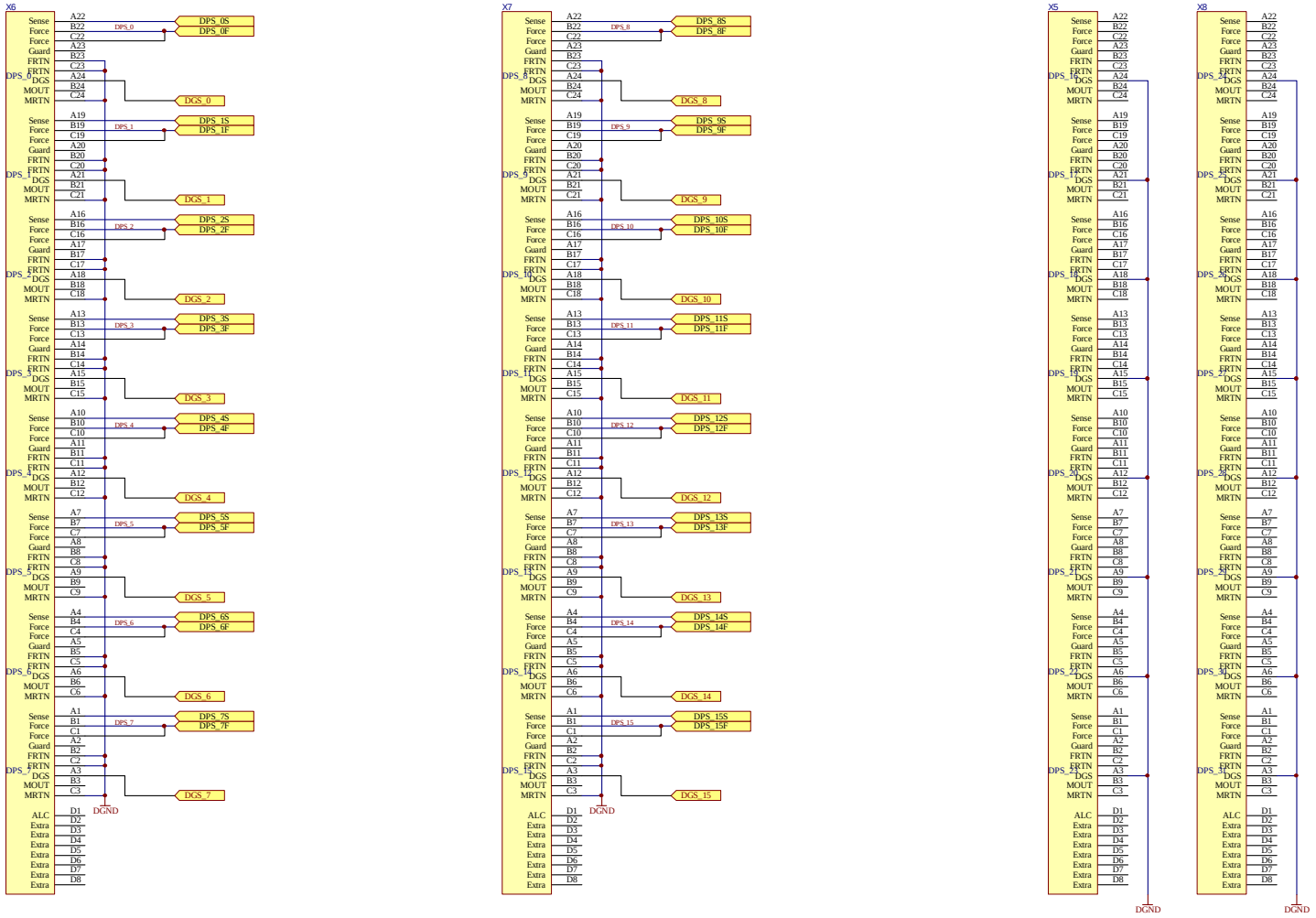

"UNISEM Europe" - configuration

Connect DPS0 to DPS15 Force/Sense Lines close to DUT

Surround Force Lines with Guard if not Power Plane

FINAL schematics

for approved

" BW0612B_ParadisoHIB_1v0.pcb"

Title: BW0612B-Paradiso-HIB

Description: Power Supplies

Checked: | Date: | Version: 1v0

Author: FS | Date: 22. Aug. 2006 | Revision: B

File: dps.sch

Smartest GmbH

Alte Landstrasse 25
D-85521 Ottobrunn
Germany

Sheet 17 of 20

BW0612B-Paradiso-HIB

Power Supplies

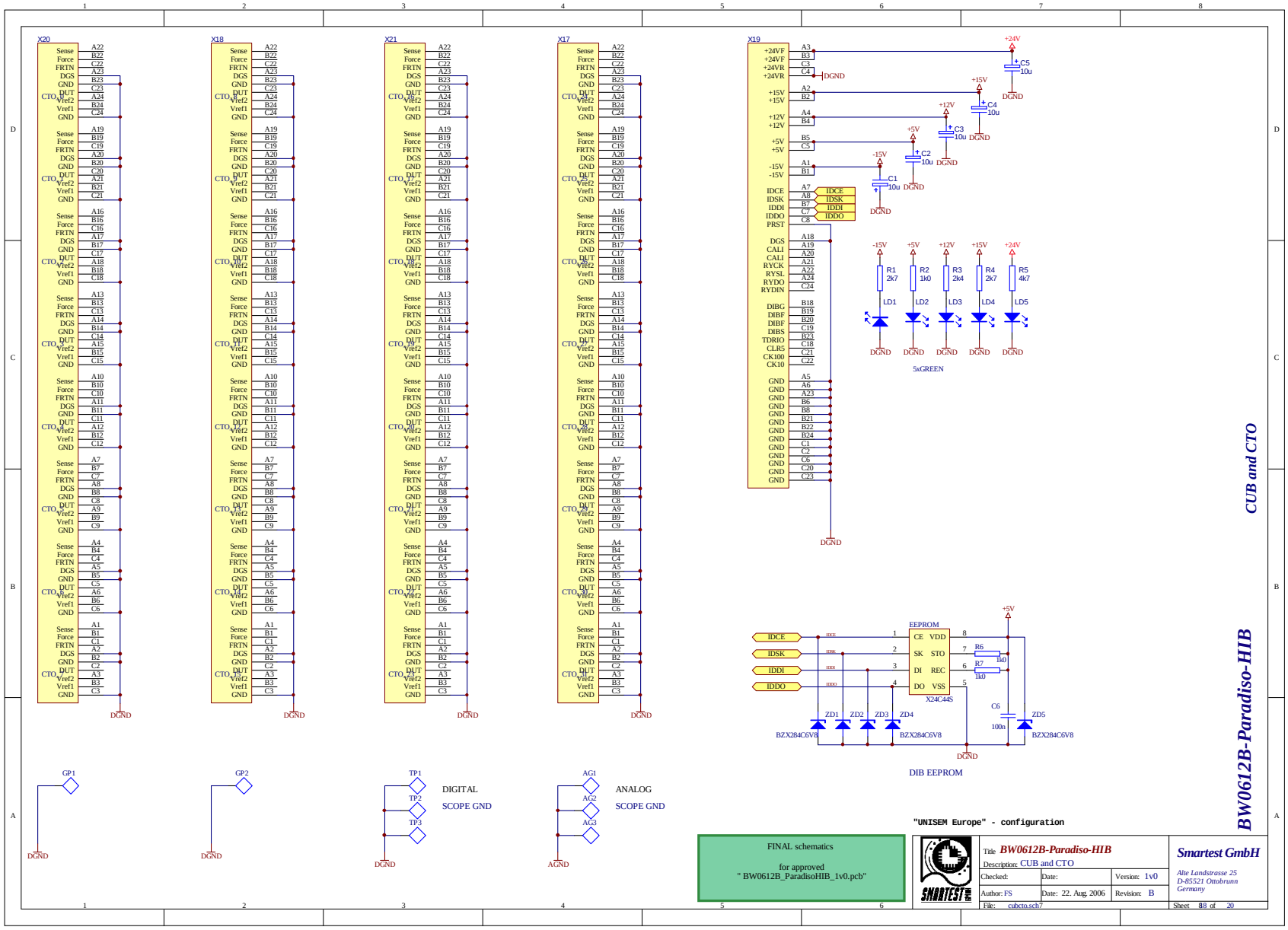
X20
X18
X21
X17
X19
Sense
Force
FRTN
DGS
GND
DUT
CTO_H
Vref2
Vref1
DGND
+24VF
+24VR
+15V
+12V
+5V
-15V
IDCE
IDSK
IDDI
IDDO
PRST
CALI
RYCK
RYSL
RYDO
RYDIN
DIBG
DIBF
DIBS
TDRIO
CLR5
CK100
CK10
C1 10u
C2 10u
C3 10u
C4 10u
C5 10u
R1 2k7
R2 1k0
R3 2k4
R4 2k7
R5 4k7
LD1
LD2
LD3
LD4
LD5
5xGREEN
EEPROM
CE
SK
DI
DO
VDD
STO
REC
VSS
X24C44S
R6 1k0
R7 1k0
C6 100n
ZD1
ZD2
ZD3
ZD4
ZD5
BZX284C6V8
DIB EEPROM
GP1
GP2
TP1
TP2
TP3
DIGITAL
SCOPE GND
AG1
AG2
AG3
ANALOG
AGND
"UNISEM Europe" - configuration
FINAL schematics
for approved
" BW0612B_ParadisoHIB_1v0.pcb"
Title BW0612B-Paradiso-HIB
Description: CUB and CTO
Checked:
Date:
Version: 1v0
Author: FS
Date: 22. Aug. 2006
Revision: B
File: cubcto.sch7
Smartest GmbH
Alte Landstrasse 25
D-85521 Ottobrunn
Germany
Sheet 18 of 20
BW0612B-Paradiso-HIB
CUB and CTO

LMFxxDGS connection to AGnd
only for PPMU use !
May induce noise in
LMF capture & source !

-> close relays K_dgsX
for PPMU measurement only.

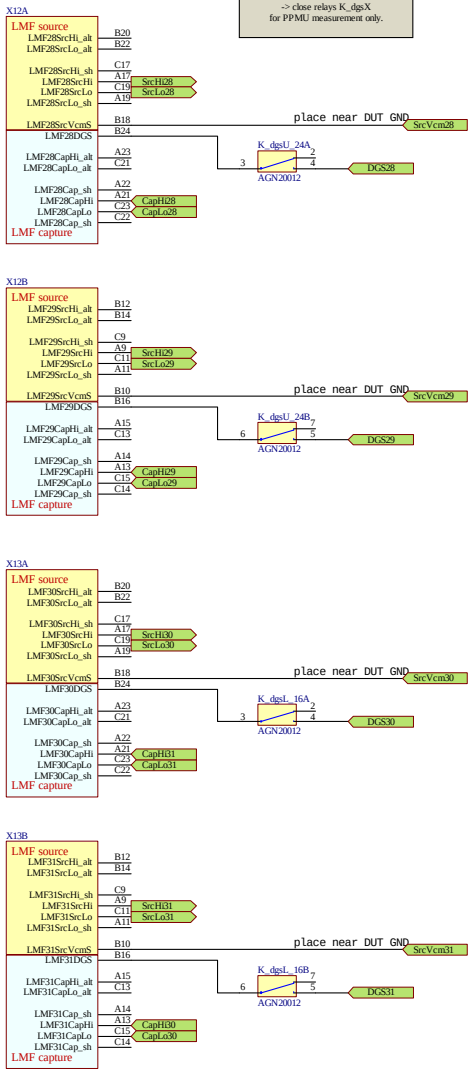

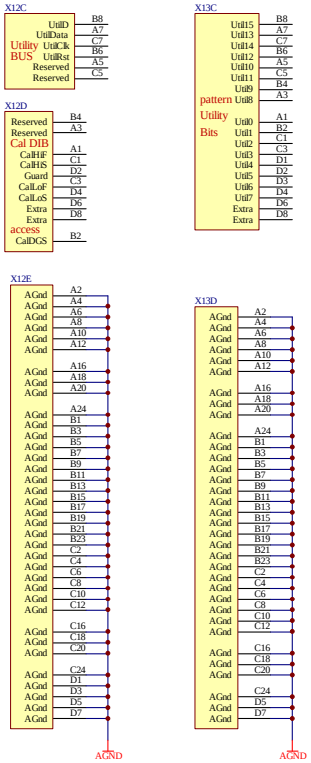

FINAL schematics

for approved
" BW0612B_ParadisoHIB_1v0.pcb"

"UNISEM Europe" - configuration

Title: BW0612B-Paradiso-HIB		
Description: LMF28..31		
Checked:	Date:	Version: 1v0
Author: FS	Date: 22. Aug. 2006	Revision: B
File: MixedSignalSlot7.sch		Sheet 19 of 20

Smartest GmbH
Alte Landstrasse 25
D-85521 Ottobrunn
Germany

BW0612B-Paradiso-HIB

LMF28..31

Programming note:

Util000 used to have clean relay status when board is not active.
When tester is idle, Util000 should (normally) be high, so all buffer outputs are OFF.

While testing, all Util??? including Util000
should be initialized at Low, (-> all relay drivers OFF). then, holding Util000=Low,
the other Util??? may be programmed.

CAUTION: the relay logic is INVERTED / direct Utility use !
[UTILxyz = ONE => B_UTILxyz OFF)

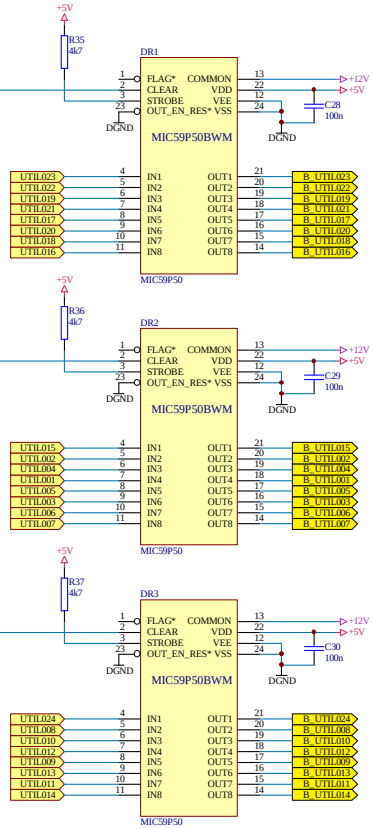

FINAL schematics

for approved
" BW0612B_ParadisoHIB_1v0.pcb"

relay drivers/buffers

BW0612B-Paradiso-HIB

Title *BW0612B-Paradiso-HIB*			**Smartest GmbH**
Description: relay drivers/buffers			*Alte Landstrasse 25*
Checked:	Date:	Version: 1v0	*D-85521 Ottobrunn*
Author: FS	Date: 22. Aug. 2006	Revision: B	*Germany*
File: Relay_control.Sch			Sheet 20 of 20